Main bearings:
T3 Segment - Taper roller bearings

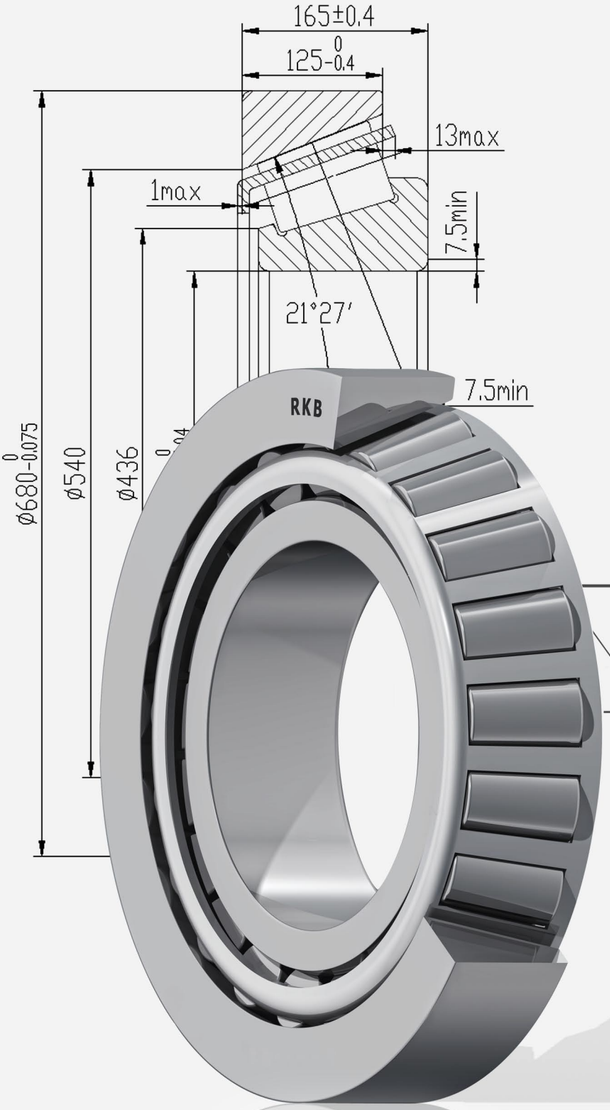

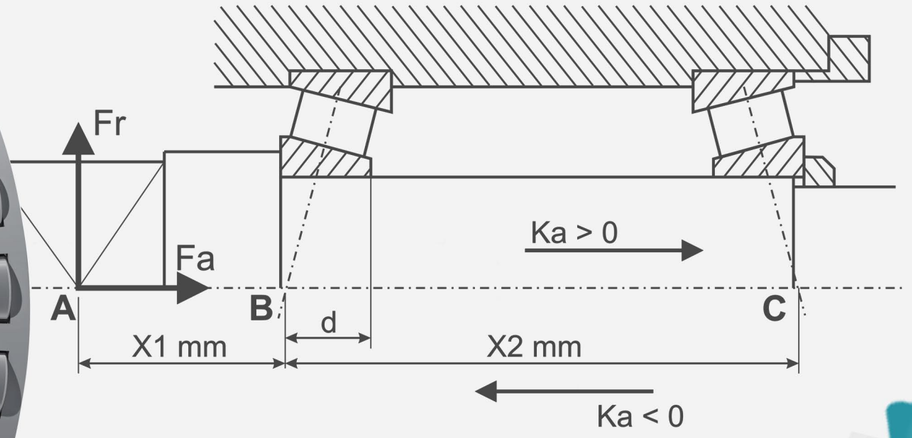

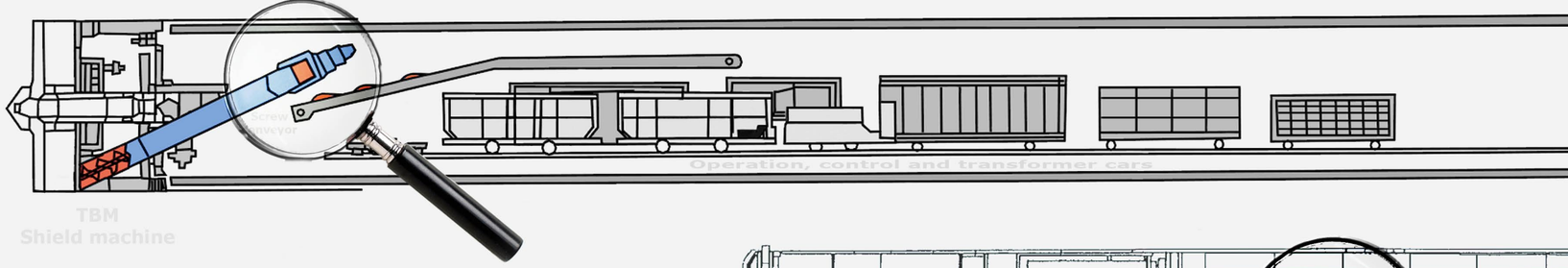

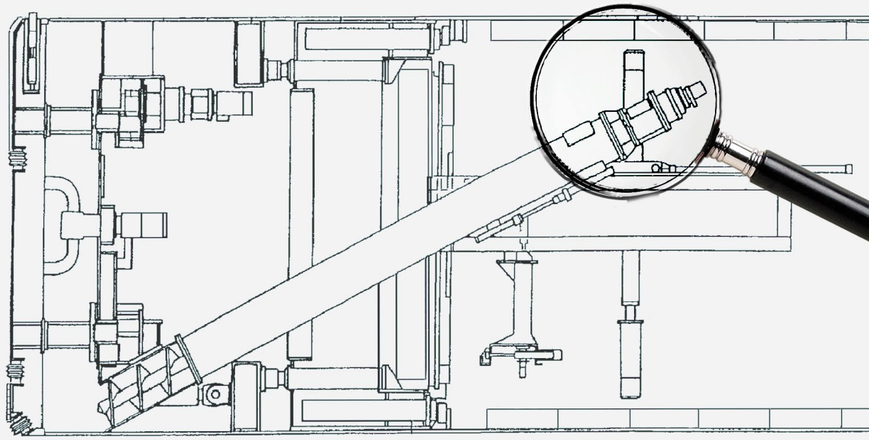

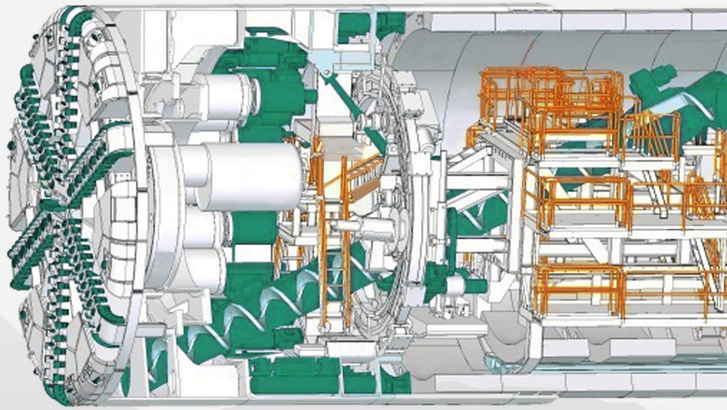

Project 'EPB'

Conveyor systems for tunnel boring machines

RKB BEARING INDUSTRIES

Main bearings:
T3 Segment - Taper roller bearings

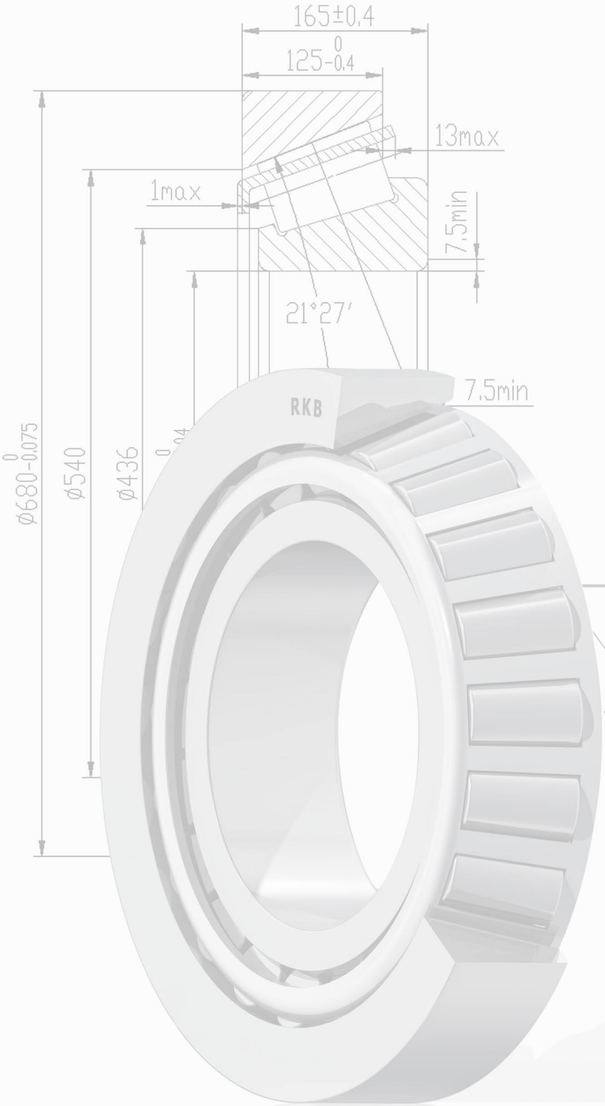

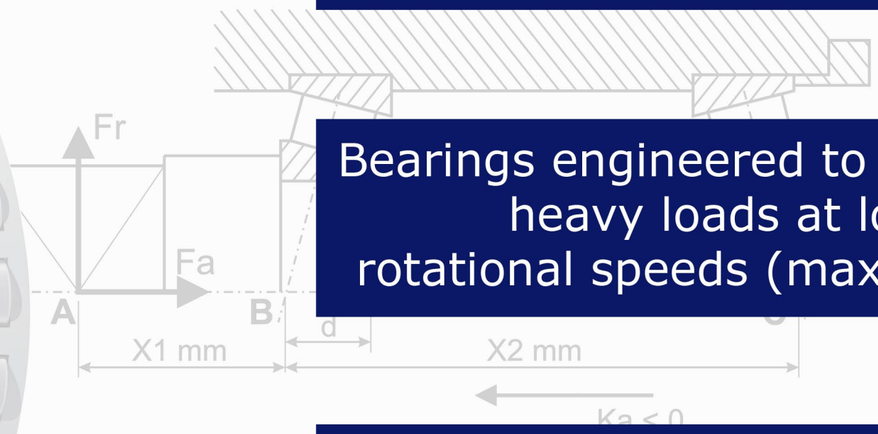

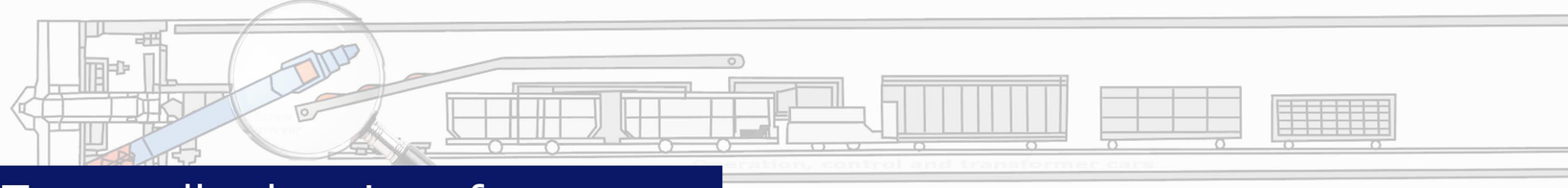

Taper roller bearings for screw conveyor hydraulic drive

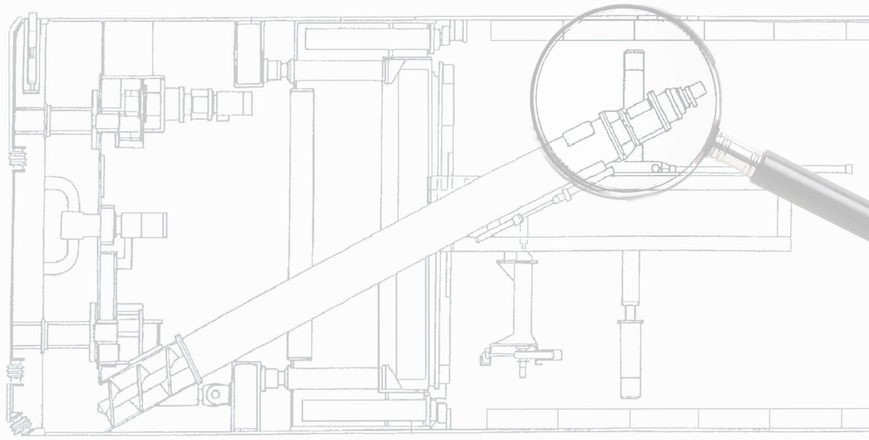

Up to 360 mm inner diameter and 680 mm outer diameter

Bearings engineered to withstand heavy loads at low rotational speeds (max. 22 rpm)

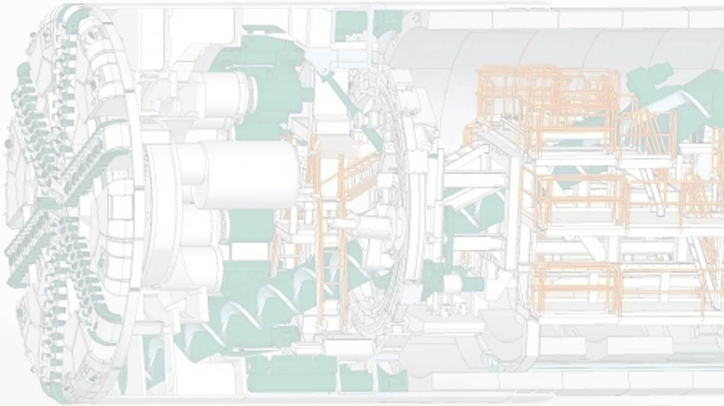

Tough Roller Technology for higher safety factor (S_0) > 4,0

Project 'EPB'

Conveyor systems for tunnel boring machines

RKB BEARING INDUSTRIES