Main bearings:
T3 Segment - Single-row taper roller bearings

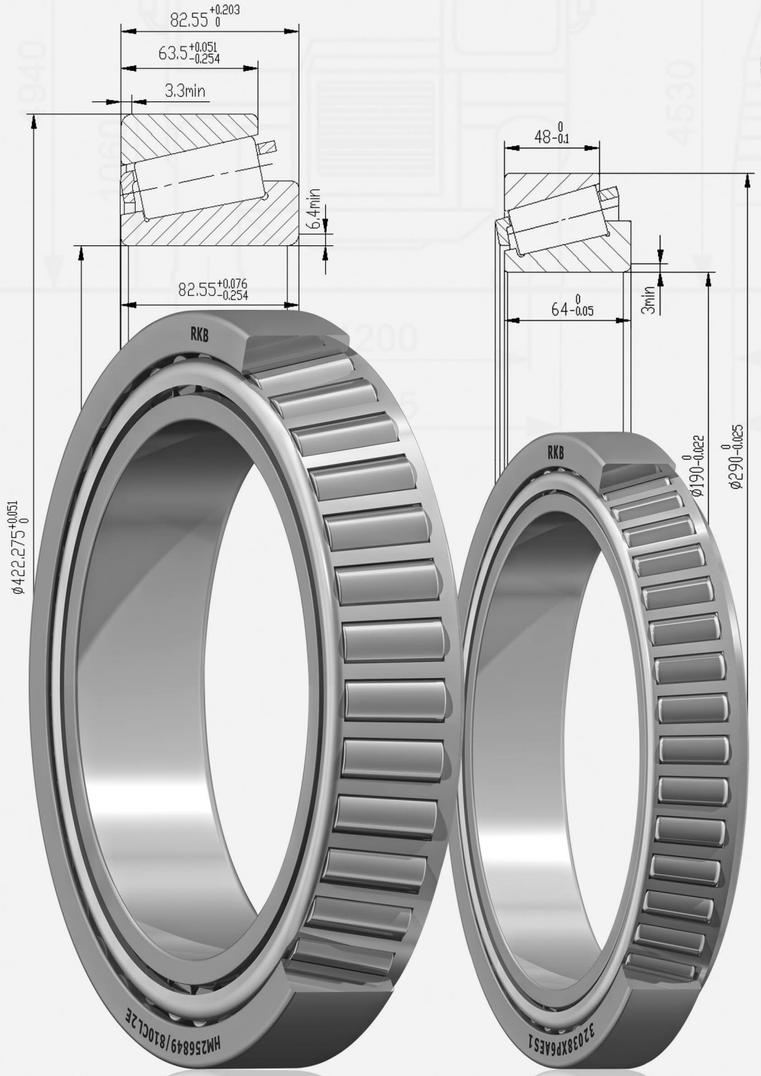

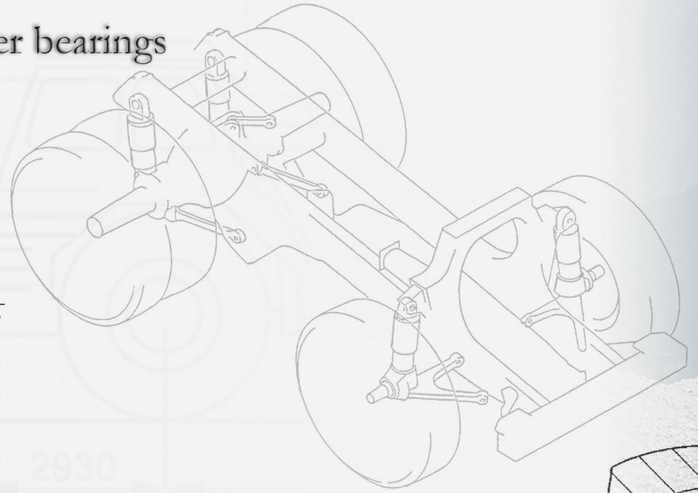

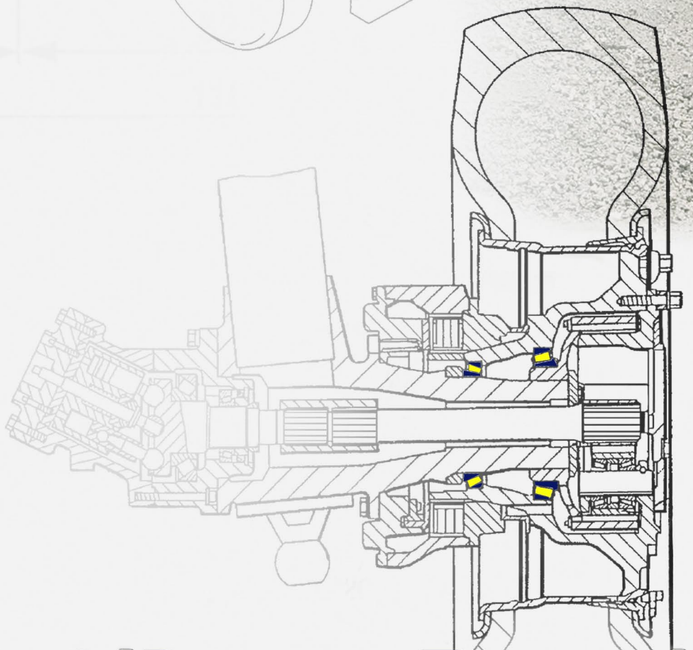

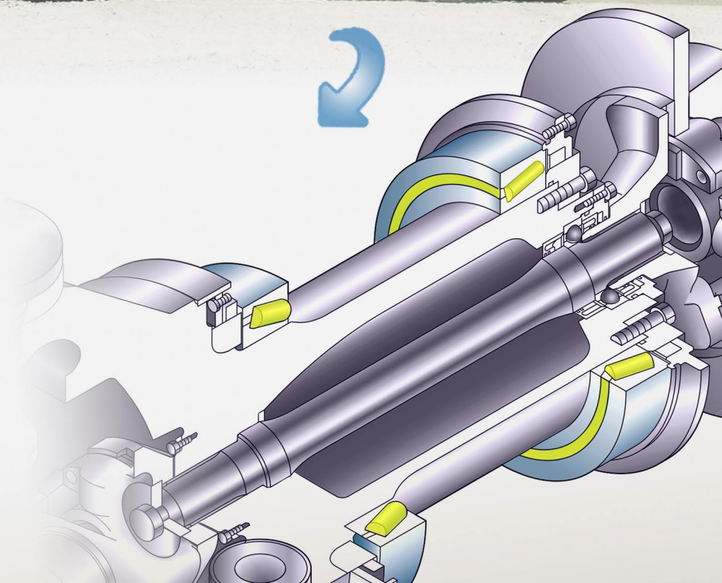

Project 'Dumper Transmission'

Front and rear axles of dump trucks

Main bearings:
T3 Segment - Single-row taper roller bearings

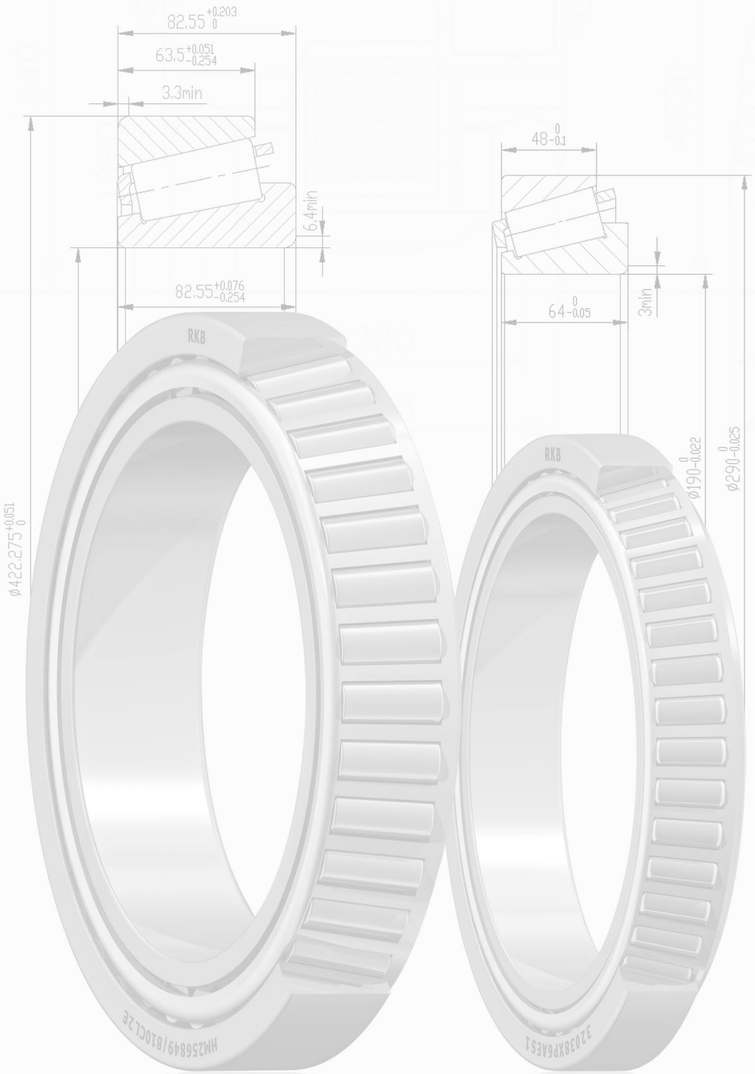

Single-row taper roller bearings
for dumper transmission
(wheel hubs of front and rear axles)

Up to 300 mm inner diameter
and 422 mm outer diameter

E-Type design and execution for
high load capacity, higher
accuracy and shock resistance

Rating life (L_{10}) > 100000 km
of the vehicle

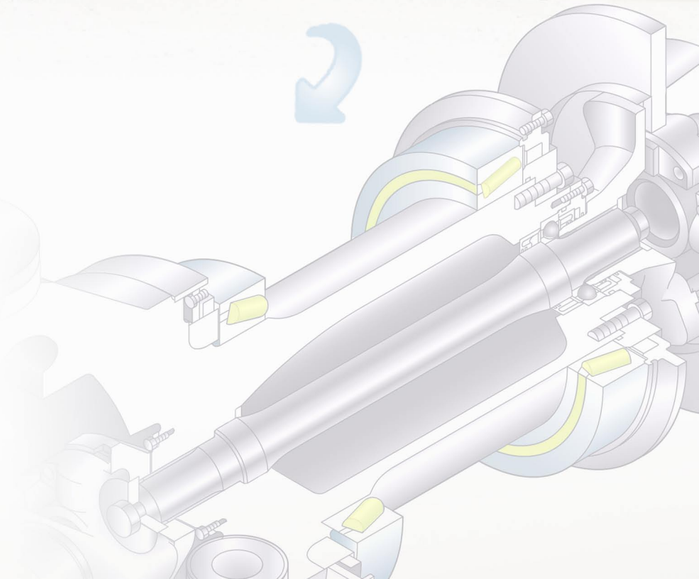

Project 'Dumper Transmission'

Front and rear axles of dump trucks